Model 606M1 Accelerometer

Seat Pad Accelerometer
MEMS, Triaxial Sensors
DC Response
Accurate Temp Compensation
ISO 10326-1 Configuration

The Model 606M1 is a MEMS triaxial seat pad accelerometer with both static and dynamic responses designed specially for characterizing whole body vibration in accordance with ISO 2631-1 and ISO 8041. The DC response of the silicon MEMS sensors is the key to yield accurate velocity and displacement results from the raw acceleration data. The 606M1 incorporates integral temperature compensation that provides a stable output over a wide operating range. The on-board voltage regulation circuit works with power supply from 8 to 32Vdc.

dimensions

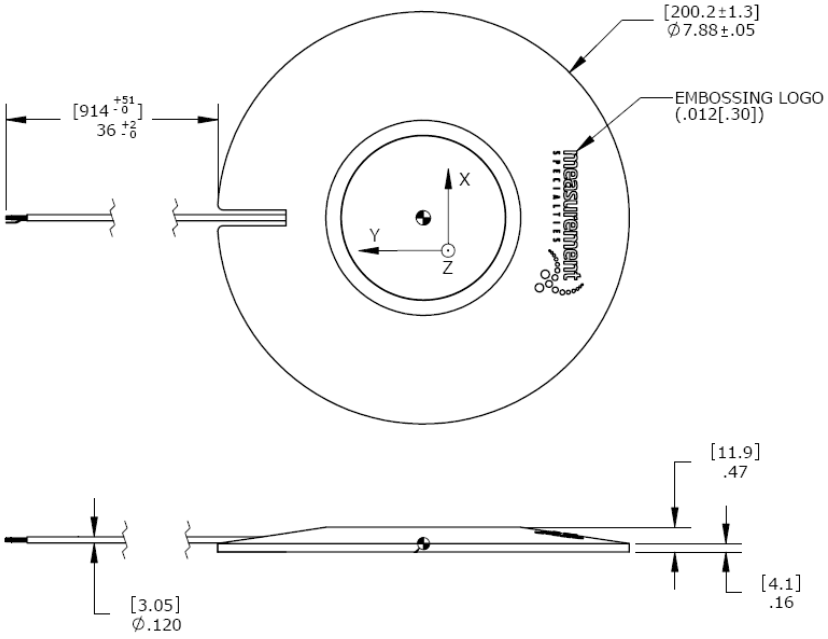

FEATURES

- Three Independent Circuits
- Low Current Consumption
- Ranges: ±25g
- Gas Damped, DC Response
- High Over-Range Protection
- Temperature Compensation
- Low Transverse Sensitivity

APPLICATIONS

- Whole Body Vibration Study
- Vibration/Shock Monitoring
- Helicopter Flight Testing
- Heavy Equipment Testing
- Biodynamic Study

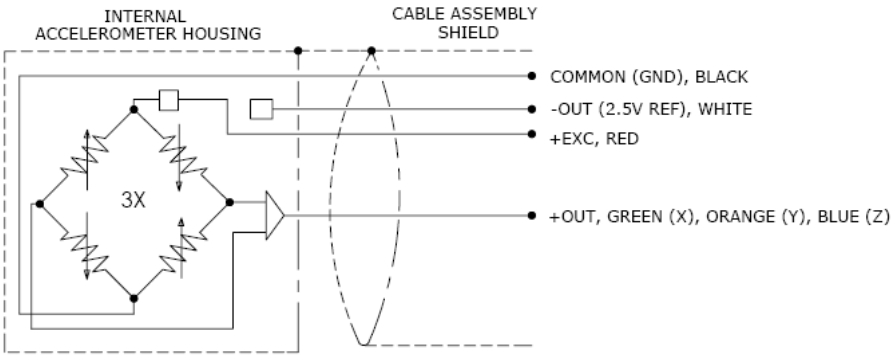

32 Journey Ste. 150 Aliso Viejo, CA 92656 949-716-5377 t&m@meas-spec.com

Model 606M1 Accelerometer

performance specifications

All values are typical at +24°C, 100Hz and 12Vdc excitation unless otherwise stated. Measurement Specialties reserves the right to update and change the specifications without notice. Standard product parameters are described in PSC-1004 for Plug & Play DC Accelerometers.

Parameters		Notes
DYNAMIC		
Range (g)	±25	
Sensitivity (mV/g)	80	
Frequency Response (Hz)	0-800	±5%
Frequency Response (Hz)	0-1000	±1dB
Natural Frequency (Hz)	4000	
Non-Linearity (%FSO)	±1.0	
Transverse Sensitivity (%)	<3	
Damping Ratio	0.7	
Shock Limit (g)	5000	
ELECTRICAL		
Zero Acceleration Output (mV)	±100	Differential
Excitation Voltage (Vdc)	8 to 36	
Excitation Current (mA)	<15	
Bias Voltage (Vdc)	2.5	
Output Impedance (Ω)	<100	
Insulation Resistance (MΩ)	>100	@100Vdc
Turn On Time (msec)	<100	
Residual Noise (μV RMS)	800	Passband
Ground Isolation	Isolated from Mounting Surface	
ENVIRONMENTAL		
Thermal Zero Shift (%FSO)	±3	Typical
Thermal Sensitivity Shift (%)	±3.5	Typical
Operating Temperature (°C)	-20 to 85	
Compensated Temperature (°C)	-20 to 85	
Storage Temperature (°C)	-20 to 85	
PHYSICAL		
Case Material (Seat Pad)	Nitrile Rubber	
Cable	6x #28 AWG Conductors, PFA Insulated, Braided Shield, TPE Jacket	
Weight (grams)	380	

Wiring color code:

X-axis: +Excitation = Red; +Output = Green; -Output (-2.5V Ref) = White; Common (Ground) = Black
Y-axis: +Excitation = Red; +Output = Orange; -Output (-2.5V Ref) = White; Common (Ground) = Black
Z-axis: +Excitation = Red; +Output = Blue; -Output (-2.5V Ref) = White; Common (Ground) = Black

Calibration supplied: CS-FREQ-0100 NIST Traceable Amplitude Calibration from 20Hz to ±5% Frequency Response Limit

Optional accessories: 101 Three Channel DC Signal Conditioner Amplifier

The information in this sheet has been carefully reviewed and is believed to be accurate; however, no responsibility is assumed for inaccuracies. Furthermore, this information does not convey to the purchaser of such devices any license under the patent rights to the manufacturer. Measurement Specialties, Inc. reserves the right to make changes without further notice to any product herein. Measurement Specialties, Inc. makes no warranty, representation or guarantee regarding the suitability of its product for any particular purpose, nor does Measurement Specialties, Inc. assume any liability arising out of the application or use of any product or circuit and specifically disclaims any and all liability, including without limitation consequential or incidental damages. Typical parameters can and do vary in different applications. All operating parameters must be validated for each customer application by customer's technical experts. Measurement Specialties, Inc. does not convey any license under its patent rights nor the rights of others.

PART NUMBERING Model Number

606M1

32 Journey Ste. 150 Aliso Viejo, CA 92656 949-716-5377 t&m@meas-spec.com